Wall-Smart for iPad® mounting installation instructions

General

Installs and finishes are in the same manner as drywall.
It is recommended to be installed by a drywall specialist.
Configured for installation in 12.7mm (½") thick clad constructions, as standard configuration, with flush screwed.

The Wall-Smart has an edge thickness to accommodate 1/2" drywall, so shimming may be required if adjacent material is not 1/2" drywall.

Pre installation

- Determine where the Wall-Smart will be located. For an easier access to the iPad® when standing, It is recommended to locate the center of the Wall-Smart approx. 54" from the floor.
- For iPad charging, be sure to provide USB 5V 2A power supply behind the Wall-Smart adapter in accordance with your local electric code.

Installation Tools and materials:

- Screwdriver
- Screws
- Measuring tape
- Safety goggles
- Utility knife/saw
- Leveler
- Drywall mud or joint compound
- Paint (for drywalls)
- Brush \ sponge roller
- Pencil
- Spatula
- Spackle tray

All rights reserved to Wall-Smart Ltd.

Installation procedure:

Step 1 – Cut and Place

- Draw a rectangular area 16.14"w X 13.5"h (410 w X 344 h mm) with a pencil, ruler and leveler.
- Cut the drywall out with a utility knife or a saw.

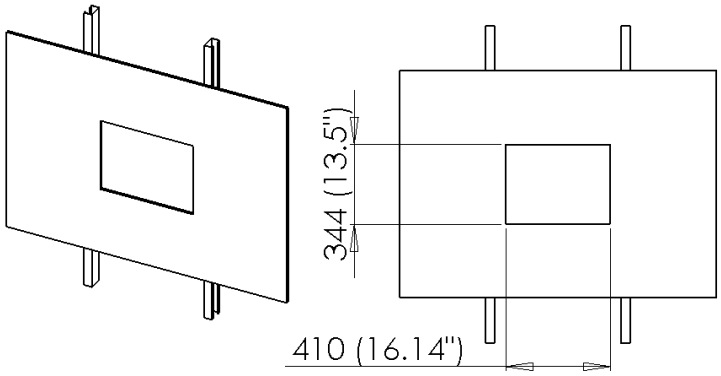

Pic. 1

- Chamfer the rim of the opening, (see Pic. 2).

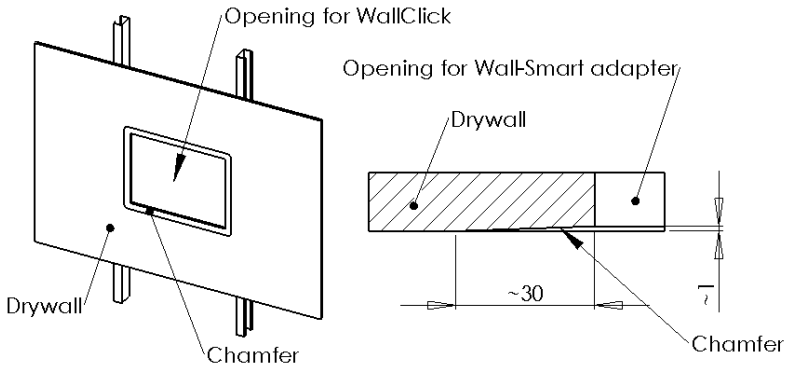

Pic. 2

- Check the area for studding that will act as a base to install the Wall-Smart.
- Measure and cut studs to the correct size (generally studs should have an off-set of 18mm inwards from each side). The Wall-Smart should have studding to attach around the perimeter of the opening. Install studs where needed. You can install studs horizontally between existing studs to give added support if necessary.

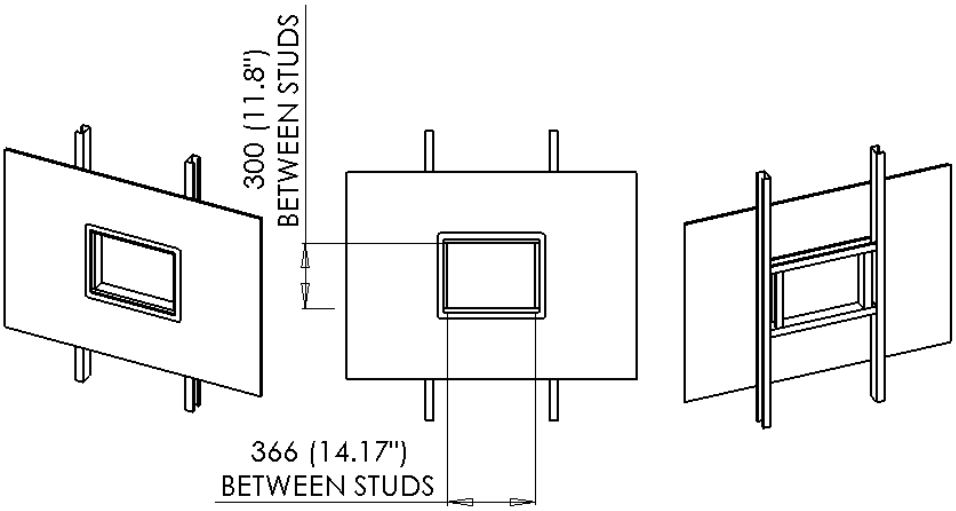

Pic. 3

All rights reserved to Wall-Smart Ltd.

- Fit the Wall-Smart adapter into the opening ensuring it is positioned square. Fix through the pre-formed holes located in all sides of the Wall-Smart frame into the studs. It is recommended starting with the corners. Screws are to be #6 bugleheads.

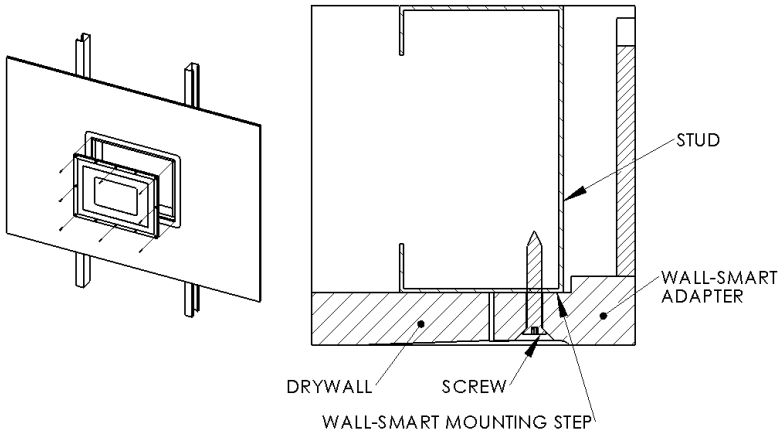

Pic. 4

Step 2 - Mud and tape

- Ensure that the front surface is aligned with the drywall and that all of the screws are driven below the surface of the drywall.
- Fill the hatches with drywall putty. Perform standard mud and tape drywall joining procedure. (See pic. 5)
- For finishing use same method as drywall.
- Do not apply putty to front surfaces and slit. Apply putty to external groove only. Sand excess putty to level with front surfaces.

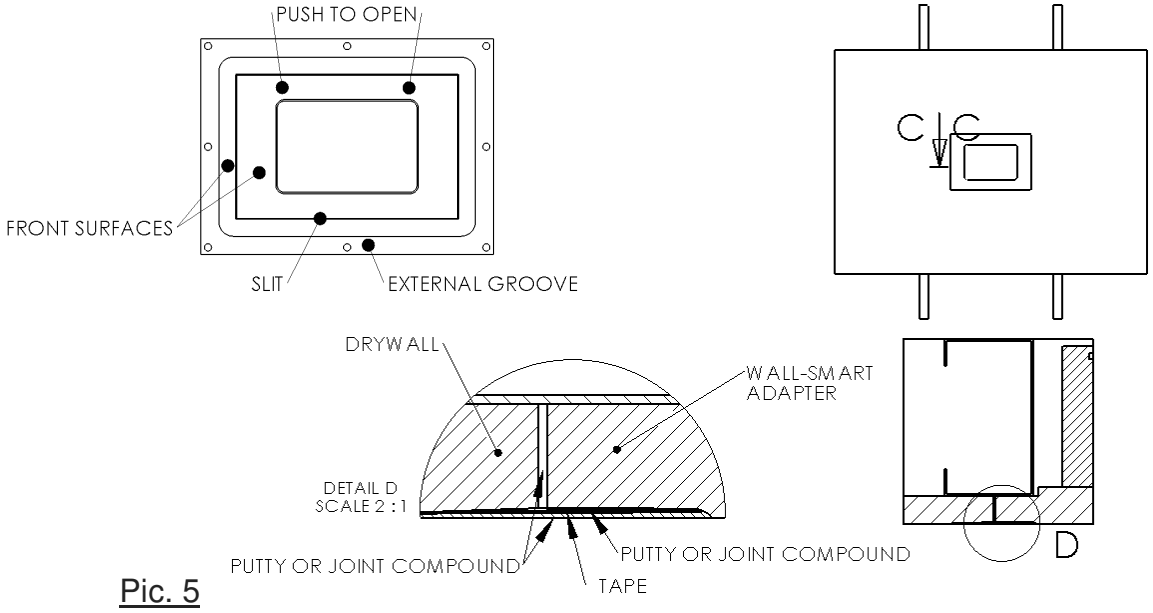

Pic. 5

Step 3 – Painting

- Insert the iPad® dummy plug to make sure the interior will not be painted.
- Paint and painting procedure are in the same manner as drywall painting.
- Paint the number of coats necessary to achieve the desired coverage.
- Avoid spray painting.
- In case acrylic paint used, spills on internal parts may be cleaned using Alcohol (internal parts painted by Polyurethane paint).

iPad® is a trademark of Apple Inc., registered in the U.S. and other countries.

All rights reserved to Wall-Smart Ltd.

Wall-Smart ltd. - LIMITED WARRANTY

WALL-SMART LTD. - (hereafter Manufacturer) warrants its Wall-Smart products to be free from manufacturing defects in materials and workmanship for one (1) year following the date of sale. Manufacturer will, within said period, at its option and in accordance with the terms of this Limited Warranty, repair or replace any product failing to operate correctly without charge to the original purchaser or user. In case of defect, contact the professional who installed the product. In order to exercise the warranty, the product must be returned by the user or purchaser, shipping costs prepaid and insured to Manufacturer. Manufacturer will not be responsible for any dismantling or reinstallation changes.

This warranty shall not apply to any equipment, or any part thereof, which has been repaired by others, improperly installed, improperly used, abused, altered, damaged, subjected to acts of God, or on a product in which the fault does not prevent the use of the product at the installation site. Manufacturer shall only be responsible for the quality of the color of the product if painted at the Manufacturer production facility.

There is no express or implied warranty of merchantability or warranty of fitness for a particular purpose. Any action for breach of warranty, including but not limited to any implied warranty of merchantability, must be brought within the six months following the end of the warranty period. In no case shall Manufacturer be liable to anyone for any consequential or incidental damages for breach of this or any other warranty, express or implied, even if the loss or damage is caused by the Manufacturer's own negligence or fault.

In no event shall Manufacturer be liable for an amount in excess of Manufacturer's original selling price of the product, for any loss or damage, whether direct, indirect, incidental, consequential, or otherwise arising out of any failure of the product. **CONSEQUENTLY, ED SHALL HAVE NO LIABILITY FOR ANY PERSONAL INJURY, PROPERTY DAMAGE, OR OTHER LOSS BASED ON A CLAIM RELATED TO THE PRODUCT FAILURE.** Manufacturer's warranty, as herein above set forth, shall not be enlarged, diminished or affected by - and no obligation or liability shall arise or grow out of - Manufacturer's rendering of technical advice or service in connection with Buyers order of the goods furnished hereunder.

This warranty contains the entire warranty. Additionally, this warranty is in lieu of all other obligations or liabilities on the part of Manufacturer it is the sole warranty and any prior agreements or representations, whether oral or written, are either merged herein or are expressly canceled. Manufacturer neither assumes, nor authorizes any other person purporting to act on its behalf to modify, to change, or to assume for it, any other warranty or liability concerning its products.

Some states do not allow limitations on how long an implied warranty lasts or do not allow the exclusion or limitation of incidental or consequential damages, or differentiate in their treatment of limitations of liability for ordinary or gross negligence, so the above limitations or exclusions may not apply to you. This Warranty gives you specific legal rights and you may also have other rights that vary from state to state.

Upon request, Manufacturer will provide a report on the repair of a returned product.

For the following serial no. _____

Date of sale: _____

Place of sale / Dealer: _____

All rights reserved to Wall-Smart Ltd.